Stair-Glide®

Stair lift for straight, curved or spiral stairs

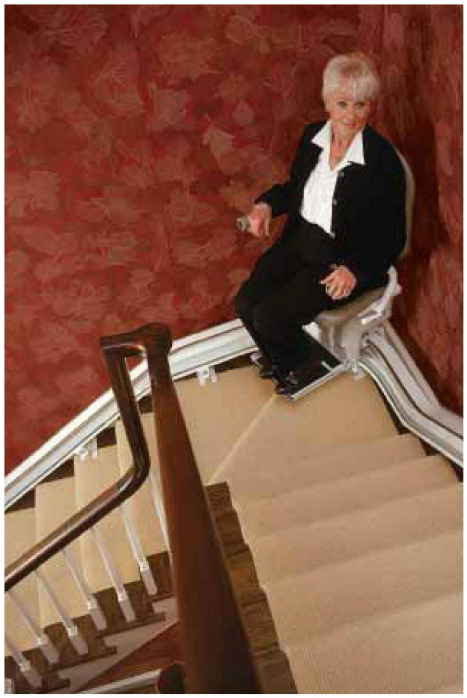

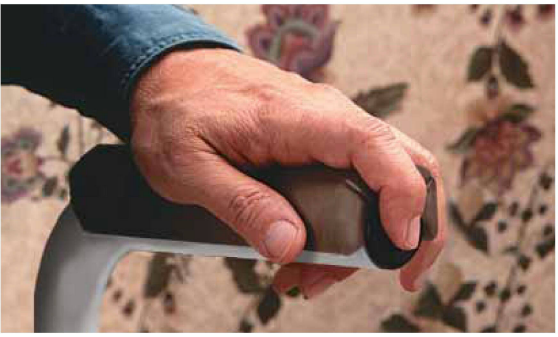

ThyssenKrupp Access

Accessibility Division

ThyssenKrupp

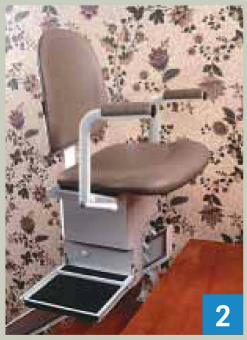

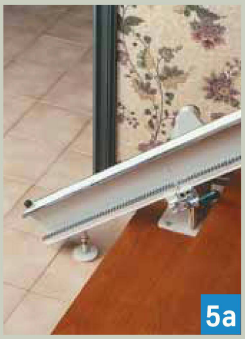

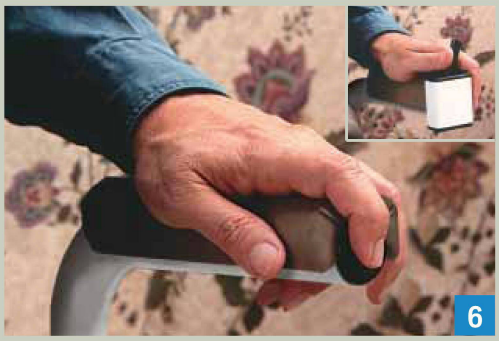

1. Stair-Glide stair lift. *Custom crafted to fit a variety of stair shapes, angles and can go up multiple flights.*
2. Swivel seat: *Lever release allows seat to swivel and lock at 60º and 90º at top landing, thus allowing rider to safely exit.*
3. Obstruction sensor: *Lift detects something in its path and automatically stops so you can remove it.*
4. Compact design: *Seat, arms and footrest fold up when unit is not in use.*

5a., 5b. Optional folding track

6. Controls: *Constant pressure button control at end of each armrest. Optional joystick control (inset).*

Stair-Glide features

- **Stair shape:** Straight, curved or spiral
- **Rated Load:** 300 pounds (135kg)
- **Speed:** 25 fpm (0.13 ms)
- **Incline limits:** 25º to 45º
- **Drive system:** Rack and pinion
- **Power supply:** 115 VAC, 60 Hz, 3-wire grounded outlet
- **Controls:** Constant pressure up-down controls in ends of arms and call/send controls
- **Travel:** 60' max. (18.2m)
- **Motor:** 1/2 hp, 120 VDC, 60 Hz (reversible)
- **Motor controller:** SoftStart
- **Brake:** Self-locking worm gear
- **Track:** 2 $^5/_8$" wide steel beam
- **Track length:** 16' stock or custom cut
- **Track finish:** Ivory powder coat
- **Seat:** 18" wide seat with two straight fold-up arms and 60º/90º locking swivel seat at the top landing
- **Upholstery:** Plum, teal, or oatmeal herringbone fabric; taupe, misty gray or sable brown vinyl
- **Safety devices:** Footrest obstruction sensors, seat belt, and swivel seat cut-off switch
- **Listing:** U.L., CSA and c/U.L. Listed
- **Warranty:** Five years on drive train and two years on all component parts

Optional Equipment

- Wraparound arms, folding
- Upholstered hand rests for wraparound arms
- Hand-held pendant control
- Joystick control on arm
- Wireless call/sends (RF)
- Final limit switch – top and bottom landing
- Manual lowering device (hand crank)
- Key switch on call/send controls and unit
- Key switch on unit only
- Overspeed brake
- Folding rail – manual or power
- Public building package (key switch on call/send controls and unit, overspeed brake, operation plaques and fire warning decals)
- Outdoor residential package

Upholstery options:

Fabrics: *plum, teal, or oatmeal herringbone*

Vinyls: *taupe, misty gray or sable brown*

Specifications and/or colors subject to change without notice.

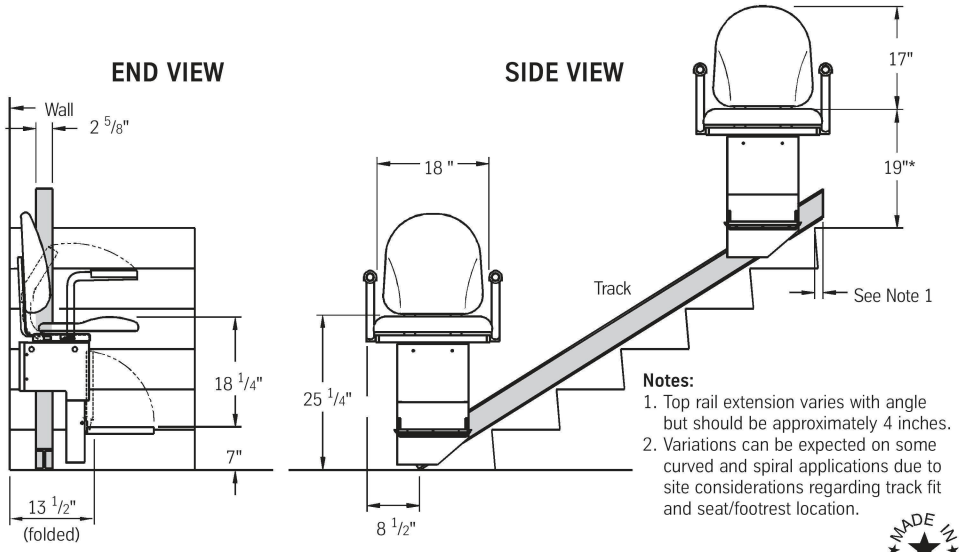

Notes:
1. Top rail extension varies with angle but should be approximately 4 inches.
2. Variations can be expected on some curved and spiral applications due to site considerations regarding track fit and seat/footrest location.

MADE IN THE USA

Manufactured in USA since 1947.

Independent Mobility Solutions.co
440 Getty Avenue, Clifton NJ 070
973.478.9219

14M0906-PM176revE